Sudan's Nationally Determined Contributions (NDC) Project

Baselines for mitigation contributions in the energy sector

Table of Contents

1. Information about the energy sector in Sudan 1
   1.1. IPCC classification of the energy GHG emissions sources 3
   1.2. Contribution of the energy sector to sustainable development 3
2. Legal, Policies and development planning related to the sector 4
3. Main classifications of Sudan's energy sub-sectors 6
   3.1. Household Sub-sector 6
   3.2. Electricity Sub-sector 7
   3.3. Transportation Sub-sector 9
4. Sudan's Energy sector GHG emissions and trends 11
   4.1. Overview of GHG emissions of various energy sub-sectors 11
   4.2. Projections and Baseline Scenario 12
5. Energy Sector mitigation projects 14
6. Mitigation opportunities in the energy sector 15
   6.1. Rural Electrification Plan during the Period of 2020-2035 18
      6.1.1. SHS Solar Home Systems Program 18
      6.1.2. Solar Pumps 19
      6.1.3. Generation from Roof Top Systems 19
      6.1.4. Other Renewable Energy Technologies 19
7. Socio-Economic Benefits 19
8. Gender Perspective 20
9. References 21

List of Tables

Table 1: GHG emissions from the energy sector, 2020 (Gg) 11
Table 2: Sudan's Intended Renewable Energy Mitigation Contributions..... 16
Table 3: Sudan's Intended Energy Efficiency Mitigation Contributions..... 17

List of Figures

Figure 1: Sudan's Energy Balance and Flows (000 TOE) - 2017..... 2
Figure 2: Electrification rate by state (%) and Electricity consumption (KWh/capita/year) for each state .. 9
Figure 3: Projected Sudan energy use in the Baseline Scenario 10
Figure 4: Projected GHG emissions in the Baseline Scenario 12
Figure 5: Annual Generation Capacity Additions (MW) during Period 2020-2035..... 13
Figure 6: Electricity Generation Projected GHG emissions in the Baseline Scenario..... 13

1. Information about the energy sector in Sudan

Energy is power derived from the utilization of physical or chemical resources, especially to provide light and heat or to work machines. Electric, thermal, mechanical, and other types of energy are necessary for land use and development activities, including the grading and mining of land and the construction and maintenance of structures. A portion of the energy used in the world is derived from sources considered renewable on a human timescale, such as hydro, geothermal, solar, wind, biomass, and from nuclear sources. However, most energy comes from the burning of fossil fuels, such as coal, natural gas, and petroleum.

Sudan is one of the least developed countries, where energy use is increasing rapidly. The energy sector has an essential role in the sustainable development for Sudan. It helps in providing power to different public services such as health care, education, public transportation, and household electrification and other sectors as for agriculture, different industrial activities, mining... etc. [1]

The main sources of primary energy in Sudan are oil, hydroelectricity, biomass, and renewable energy. Coal, natural gas, and uranium are nonexistent in Sudan. The main transformation and conversion process are electric power generation, oil refinery, and wood-to-charcoal conversion. The main end-use sectors of energy are categorized as household, Transport, Services, Industry and Agriculture. [2]

Ministry of Energy and Mining (2018) reported that Sudan consumed about 12.585 million tons of oil equivalents in form of primary energy (excluding losses) in the year 2017; about 50.9% of this amount was in form of biomass while 40.8% and 8.3% were the percentage from petroleum and hydro-power, respectively. Through the comparison between energy balance for 1999 and 2011, it is found that the growth rate of energy consumption in Sudan is about 3.6% annually, which is higher than the growth rate of energy supply. This indicates that transformation losses are getting less. The increase of energy consumption in year 2017 is more than 60% higher than year 1999. The following figure demonstrates Sudan's Energy balance for the year 2017.

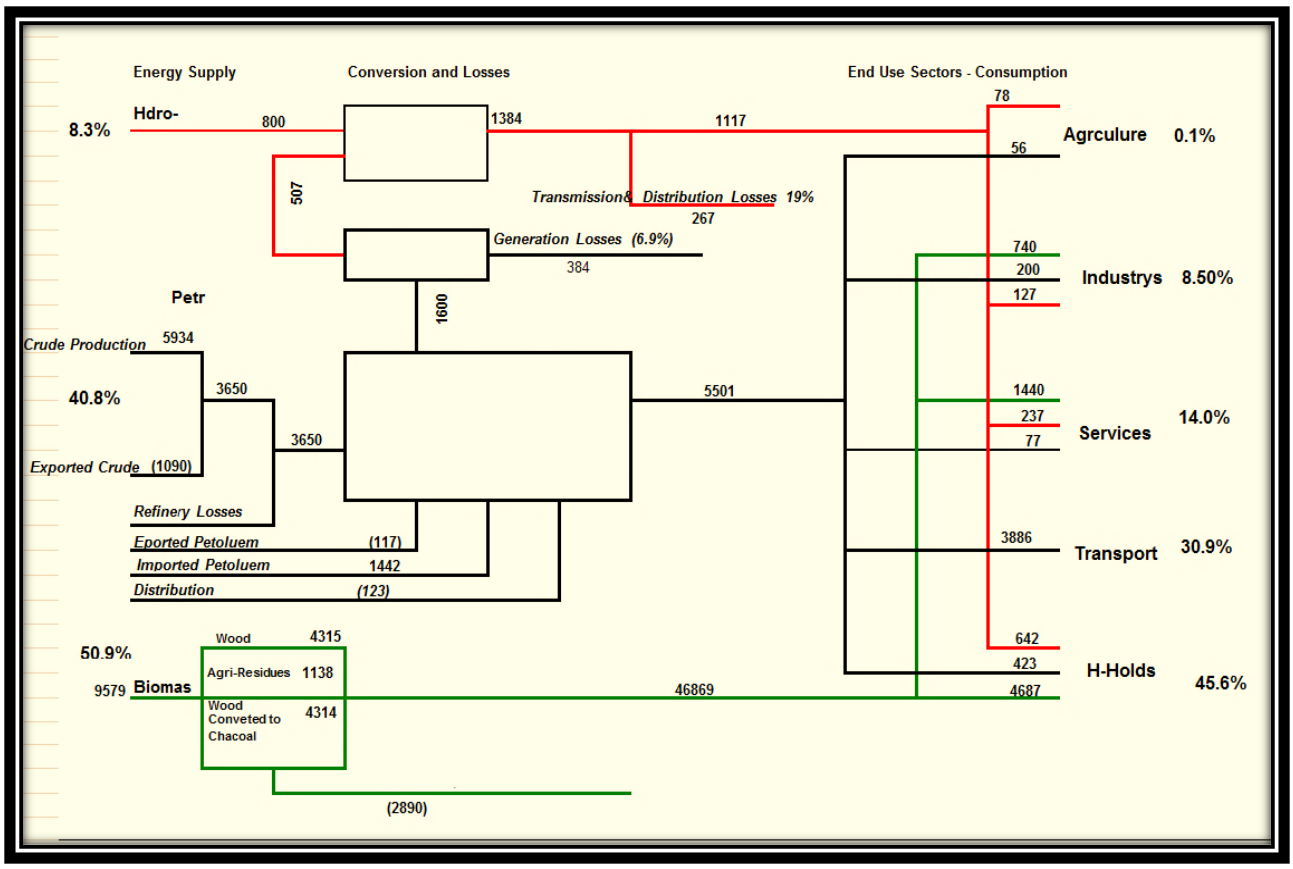

Figure 1: Sudan's Energy Balance and Flows (000 TOE) - 2017

Source: Ministry of Energy and Mining

For simplification, Sudan's energy sector can be divided into three main sub-sectors, which are electricity, transportation and household energy use. These sub-sectors are also divided into areas as follows:

1- Electricity sub-sector

- Electricity supply
- Electricity Demand

2- Transport sub-sector

- Public Transport
- Private Cars
- Goods vehicles

3- Household and public services sub-sector

1.1. IPCC classification of the energy GHG emissions sources

GHG emissions in the energy sector result from the production, transformation, handling, and consumption of energy commodities, mainly from fuel combustion and fugitives' emissions. There are two major combustion-related emission sources: stationary and mobile. Each source can be divided into activities that include various emission processes. According to the IPCC classification stationary sources of emissions include the following categories: [3]

- Energy industries include activities such as energy extraction, energy production and transformation, including electricity generation, petroleum refining, etc.
- Manufacturing industries and construction include activities such as iron and steel production, non-ferrous metal production, chemical manufacturing, pulp, paper and print, food processing, beverages and tobacco, etc.
- Other sectors such as Commercial/Institutional, Residential and Agriculture.

Mobile sources of emissions include the following categories:

- Civil Aviation.
- Road Transportation (e.g. cars, light duty trucks, heavy duty trucks and buses, motorcycles, etc.).
- Railways.
- Navigation.
- Other transportation activities, (e.g., pipeline transport).

1.2. Contribution of the energy sector to sustainable development

Energy is central to sustainable development and poverty reduction efforts. It affects all aspects of development -- social, economic, and environmental -- including livelihoods, access to water, agricultural productivity, health, population levels, education, and gender-related issues. Access to sustainable sources of clean, reliable and affordable energy has a profound impact on multiple aspects of human development. It relates not only to physical infrastructure (e.g. electricity grids), but also to energy affordability, reliability and commercial viability. In practical terms, this means delivering energy services to households and businesses that are in line with consumers' ability to pay. [4]

2. Legal, Policies and development planning related to the sector

The Sudan Government formulates its energy policies by using a participatory process between relevant ministries and relevant stakeholders for each policy field e.g. oil and electricity. The national energy policy sets the direction for the development of the energy sector in order to meet national development goals in a sustainable manner. The strategy of the Government is to provide access to electricity to 100% of the population by 2035 (85% in National Grid and 15% Off-Grid through isolated networks and Home Solar Systems) and Implement energy efficiency program to improve the consumption rate and reducing the technical losses in the transmission network to 3% and in the distribution Grid to 11% by the end of the planning period.

Although Sudan has a huge potential of renewable energies resources, there are no policies that encourage supporting the implementation of renewable energy projects, but feed in tariff policy established on-going. Regarding to replacement of fuel oil by natural gas in MWRE in their long-term plan there is a scenario of a Red Sea gas fired combined cycle gas turbine that becomes competitive if there was natural gas to be found at Red Sea and valued in line with the floor price (i.e. lower domestic price in comparison with the international market price level). This option would also bring about further advantages such as better peaking capability, lower carbon dioxide emissions, and decreased dependency on fuel imports. If sufficient amounts of natural gas will be available in Red Sea the NG fired CCGT offers an alternative fuel for the future power generation in Sudan to diversify its energy sources. Currently, there is no large-scale extraction of natural gas in Sudan and there are only relatively small proven reserves. The only source which is partly under development and partly producing is the associated and free gas from the two producing fields in South Kordufan (Neem). It is planned to transport this gas to Al Fula power plant as a blend of both gases through a pipeline of some 80 km which is currently under construction. Further information indicates that there are considerable finds of free gas (i.e. natural gas) under development, one being the well to supply Al Fula amounting to 130 billion cubic feet of gas available for production. In addition, there are estimates of 770 billion cubic feet of natural gas available in South Kordofan, at Red Sea and to a small extent in Blue Nile state. [5]

General drivers for renewable energy in Sudan:

- Utilization of the different renewable energy resources potential in Sudan to avail the electric energy all over the country.
- To achieve a competitive price of energy from renewable sources which will lead to fuel saving.
- Diversify the energy supply sources, ensuring energy security and protecting the environment.
- To be part of the global energy development which is expected to lower the prices in the future, and contribute to the expansion of their use.
- Supporting the national economy by technology and knowledge transfer and capacities and building and promoting local RE industry.
- Contribute to the development of the different regions of Sudan, and create jobs and help stabilize the people in local communities throughout Sudan.

Policies for the development of renewable energy in the electricity sector:

- Inside the national grid areas: to build RE projects in urban and rural areas in view of the drivers above-mentioned and to ensure energy security and diversity.
- In the isolated grids (such as Al-Fashir, and Al-Geneina): in addition to securing energy demand, it saves the fuel and avoids or minimizes its transportation problems.
- In rural areas far from the grid: provides access to electric energy supply in these rural areas far from the national or the isolated grids for which the grid extension is not a feasible solution.
- Utilize RE energy sources which can work as base load power generation sources (e.g. geothermal, biomass, and solar thermal).

Challenges and barriers facing the development planning of the sector:

- The absence of clear laws by the state regarding land ownership and compensation, which creates many problems and challenges for the establishment of any project.
- Economic and political Variables and the measures taken by the government those are subject to change from time to time according to international conditions, in addition to macroeconomic indicators such as inflation.
- The vast geographical area, which hinders the implementation of rural electrification projects.
- The lack of funds required to system maintenance and expansion at the time planned for implementation.
- Migration of qualified technical staff as a result of economic variables (exchange rate rise).

3. Main classifications of Sudan's energy sub-sectors

3.1. Household Sub-sector

This sector comprises rural and urban households and public services using energy for cooking, lighting, refrigeration, space cooling, and other domestic end uses. Total Sudan population in the year 2020 was 41 million, living in 6.8 million households, about 65% of them are in the rural areas, and 35% are living in urban areas.

There are mainly 5 types of energy that are used in households: wood, charcoal, residues, electricity and LPG. There are also four general applications where energy is utilized. These are cooking, lighting, cooling (e.g. ceiling and portable fans, air conditioning, water refrigerators) and other appliances such as washing machines, recreation instruments (radio, TV sets, receivers, computers, etc), water pumps, or kitchen appliances. Generally, cooking and lighting are in every household. Others which reflect the city and urban behaviour may vary in the different districts of the city. Cooking represents a high percentage of the household energy consumption. The average cooking consumption is more than 40% fuel wood, 29 % is charcoal and the remainder is LPG. According to the current situation, biomass fuels (i.e. wood, charcoal and other agricultural wastes) which are mainly utilized in cooking purposes in rural remote areas will be

increased from 4.1 million ton of oil equivalent in the year 2000 to 6.3 million ton of oil equivalent in the year 2030 if no action is taken.

3.2. Electricity Sub-sector

The electricity service in Sudan is based on two systems; the first system is the national grid that supplies mainly central, eastern, northern, southern Sudan and parts of western Sudan. The second system is the off-grid system, which is composed of isolated small-scale thermal power plants that supply remote cities or regions. According to the Ministry of Energy statistics, until 2020 only around 37% of the population has been able to benefit from the electricity services, and about 413.4 kWh as energy per capita. The strategy of MWRE is to concentrate on the household sector and hence to provide access to electricity to over 83% of the population by 2031, and to steadily increase the power usage by 50% in the industrial sector and by 100% in the agricultural sector.

Electricity Production: The main source for GHG emission in electricity production is the burning of fossil fuel in the thermal power plants, most notably Heavy fuel oil, Gas oil, Heavy Coke Gas Oil, and Diesel oil. In 2020 the country's electricity generation installed capacity reached about 3,532 MW, (17,008GWh). This capacity includes hydro turbines producing 2,366 MW (11,395GWh) energy productions. Steam turbines, gas turbines, combined cycle units and diesel units for Thermal capacity constitute around 1,166 MW (5,613GWh) of energy production.

As the hydroelectric option is limited by seasonality factors (e.g. silt accumulation and variation of the rainy season), other power generation options should be considered. These include clean/renewable energy resources and highly efficient power plants. Additionally, in the short run improving maintenance plans and upgrading the operation systems could improve the production conditions and increase the energy generated quantity, hence MW/ton will be higher. At the same time GHG emissions are expected to be reduced.

National Grid: The National Grid (NG), which consists of large hydro power plants and large thermal units, has a relatively low emission factor of 0.231 in 2012 due to the significant hydropower contribution. After the heightening of Roseires dam, hydropower became the dominating source of electricity in Sudan and its energy production represented 80.85% of the

total generated electricity in the NG in 2013. The remaining energy was derived from conventional thermal sources (19.15%). NG covers limited geographical zones mainly in central, eastern, northern, southern and parts of western Sudan. The other parts of Sudan are served by the thermal based off grid options, which have high GHG emissions, and higher operation costs compared to the NG. The access to electricity is 55% in urban areas and 28% in rural areas. In total, only 37% of Sudan's population currently has access to electricity, whereas, about 42% of the electricity is consumed in the Khartoum area. Extension of NG is believed to lower the load on the off Grid, and thus lowers GHG emissions.

Electricity Demand: Ministry of Energy statistics have revealed that the total consumed power has increased from 9,435GWh in 2012 to 17,008GWh in 2020 (79%). The major groups that consume electricity in Sudan are the residential and services sector with around 80% of the total electricity consumed. This is mainly utilized to satisfy the lighting and cooling demands.

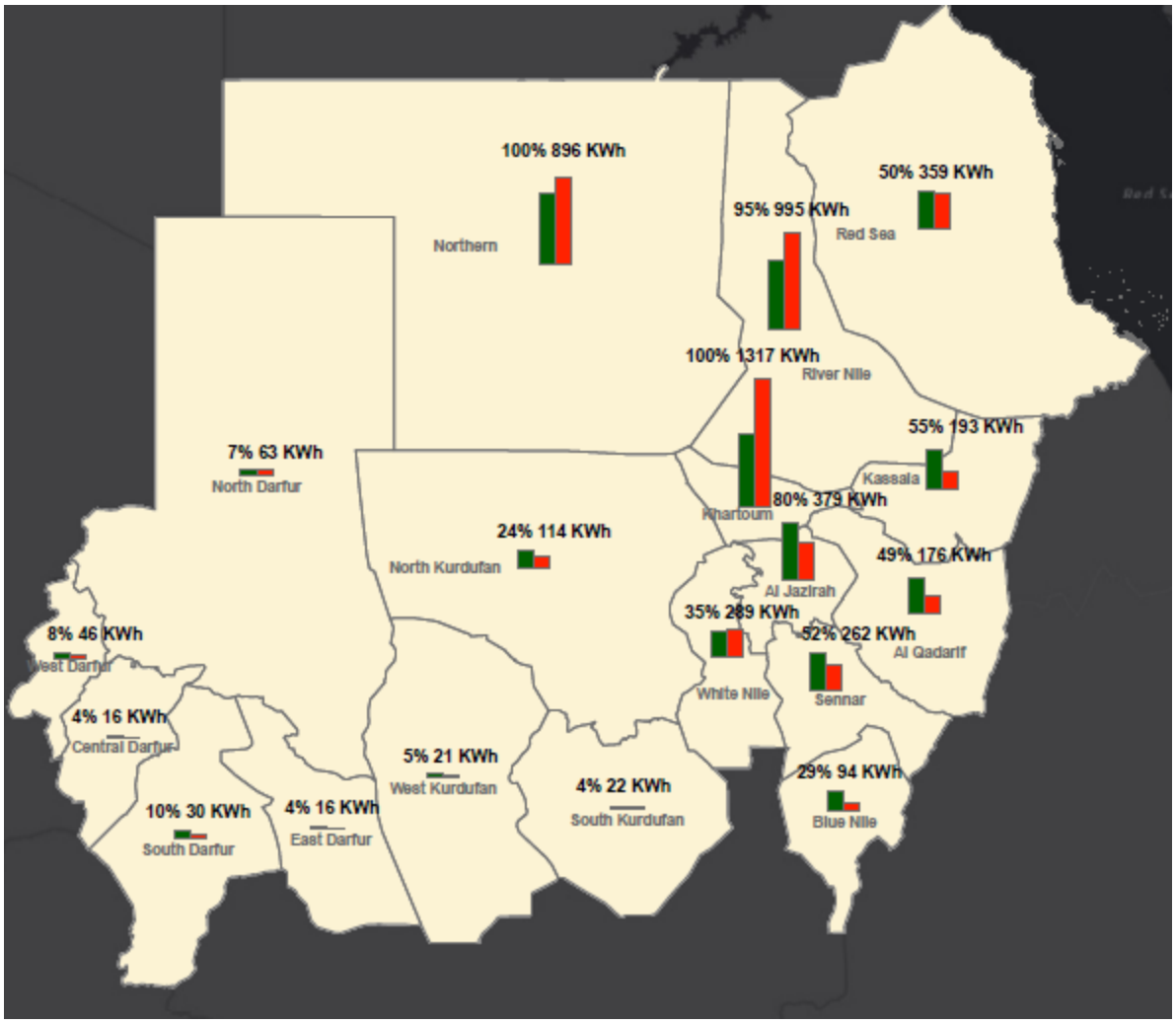

Figure 2: Electrification rate by state (%) and Electricity consumption (KWh/capita/year) for each state

3.3. Transportation Sub-sector

Private and public passenger and goods transportation is the major non-renewable energy consumer in Sudan. Diesel, gasoline and jet kerosene are fuels used for railway, road and aviation types of transportation.

• Roads: Sudan has between 20,000 km and 25,000 km of road, of which only 3,000 km to 3,500 km are paved outside of cities and towns. Roads account for almost three quarters of all commercial transport through heavy-duty trucks and light duty trucks. Annually, buses typically transport between 20 and 30 thousand people within and between cities. Since year 2000 Sudan started to import massive amounts of gasoline cars. As a result the market demand for gasoline has increased threefold between years 2000 to 2008. It is expected that by 2030, according to the

current vehicles importing rate, there will be about 1 million cars and more than 200,000 vehicles for public transportation. In comparison, in 2000 there were only about 93,150 private cars and about 48,500 public transportation vehicles.

• Rail: Sudan has about 6,000 km of narrow-gauge, single-track railroads that serve the northern and central parts of the country. The Sudan Railway Network is one of the longest systems in Africa and accounts for about 10% of all commercial transport. Annually, between 80 and 90 thousand people use rail service inter-city transport.

• Air: There are 88 airports in Sudan, 15 of which have paved runways. There is also one heliport. Passenger traffic reached nearly half a million people /day in 2009, and has been growing rapidly in recent years. Cargo transport is typically between 10 and 15 thousand tonnes per year.

• Marine: There are four seaports in Sudan: Port Sudan, Bashair, Oseef and Osman Digna. These ports accommodate roughly 8 million tonnes of goods per year. Port Sudan is the main port for the country, where 80% of the country's ocean transports passes. The port is equipped with 15 docks, and is divided into two sections: the main port serves ships bringing general cargo, and the southern port serves tankers, containers and liquid materials.

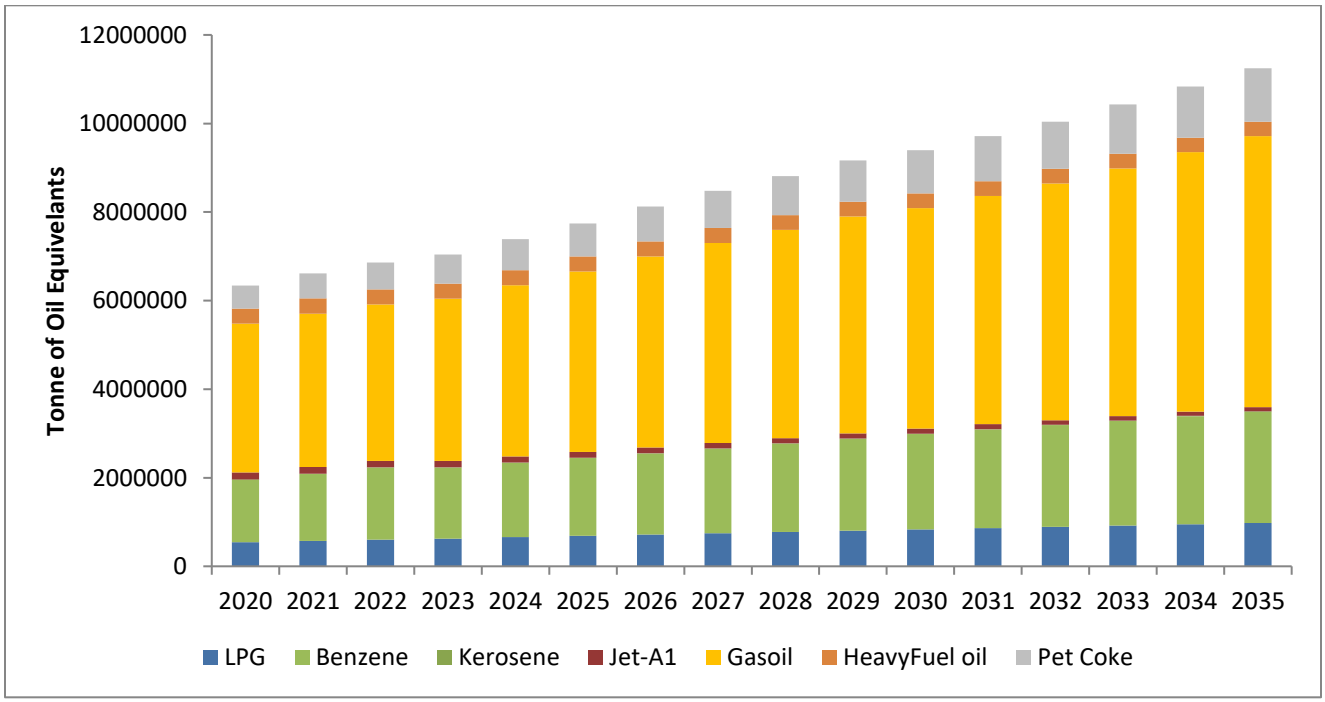

Figure 3: Projected Sudan energy use in the Baseline Scenario

4. Sudan's Energy sector GHG emissions and trends

4.1. Overview of GHG emissions of various energy sub-sectors

Emissions from the energy sector consist of two main categories: fuel combustion and fugitive emissions from fuels. Fuel combustion includes emissions released into the atmosphere when fossil fuels are combusted. Fugitive emissions are intentional or unintentional releases of gases from fossil fuels by anthropogenic activities. In Sudan, fossil fuels are used to produce energy for a wide variety of purposes (e.g., production, transportation, and consumption of energy products) and CO_2 (Carbon Dioxide), CH_4 (Methane), N_2O (Nitrous Oxide) are emitted in the process.

GHG emissions from the Energy sector for year 2020 were estimated to be 32,518 Gg CO_2. Transport category was the main contributor, accounting for 39.5% of emissions from the Energy sector. This was followed by fugitive emissions from fuels (25.7%), electricity generation (15%) and manufacturing industries and construction (6.2%). The other sectors (residential, commercial and agriculture) were contributing 4,414 Gg CO_2e (13.6) to total energy emissions. The table below shows the contributions of the subsectors to GHG emissions.

Table 1: GHG emissions from the energy sector, 2020 (Gg)

Greenhouse gas source and sink categories	CO_2	CH_4	N_2O	Total
	Gg CO_2e	Gg CO_2e	Gg CO_2e	Gg CO_2e
Total Emissions from Energy	**24,299**	**7,949**	**269.7**	**32,518**
1.A Fuel combustion activities	23,826	70.6	267.6	24,164
1.A.1 Electricity Generation	4,862	4.8	11.5	4,878
1.A.2 Manufacturing industries and construction	2,009	1.2	2.8	2,013
1.A.3 Transport	12,552	56.3	250.5	12,858
1.A.4 Commercial/Institutional	724	1.4	0.3	726
1.A.5 Residential	3,152	5.1	1.2	3,158
1.A.6 Agriculture	527	1.8	1.3	530
1.B Fugitive emissions from fuels	473	7,879	2.1	8,354

4.2. Projections and Baseline Scenario

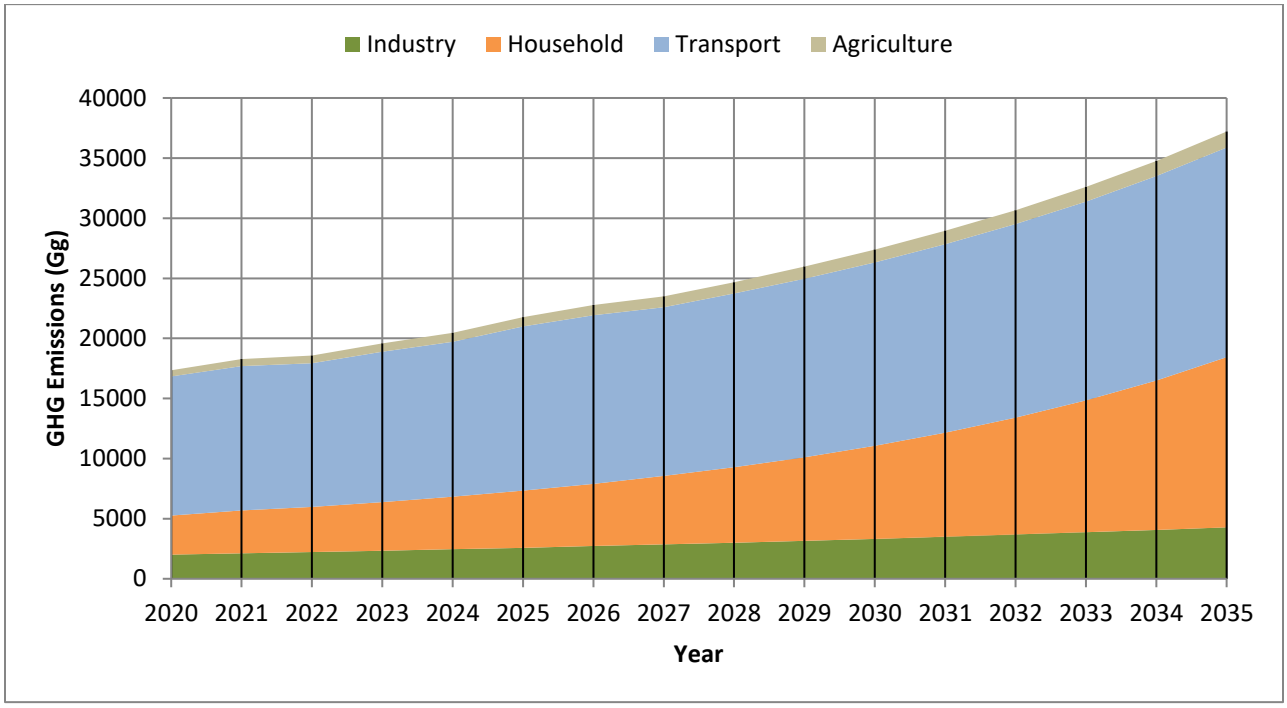

Figure 4: Projected GHG emissions in the Baseline Scenario

Most of the GHG emissions are from the transportation sector in the demand side. Industrial and household GHG emissions are relatively small because of the high use of electricity which is considered to have zero emission in the energy demand side. For electricity sector, the source for GHG emissions is from electricity generation at which the burning of fossil fuel in the thermal power plants.

Electricity Generation:

The electricity sector is composed of a national grid and some isolated networks. The total installed capacity is some 3200MW. The rate of electrification is about 37%. The system is suffering shortage and experiencing regular load shedding throughout the year. This situation dictates that Sudan Electricity Holding Company (SEHC) develops Electricity Sector Plan. Implementation Strategy is to cover the period up to 2035. This plan main objective is to raise the country electrification rate to 100% by its end of the period by introducing 13,713.0 MW of generation including thermal, hydro, and renewables.

The strategic Goals of the SEHC:

- Increasing the percentage of consumers and Electrification Rate from 37% to 100% by the year 2035 (85% in National Grid and 15% Off-Grid through isolated networks and Home Solar Systems.
- Add (4050) MW of renewable energy (Wind - Solar) and 1280 MW of Nuclear energy by the end of planning period.

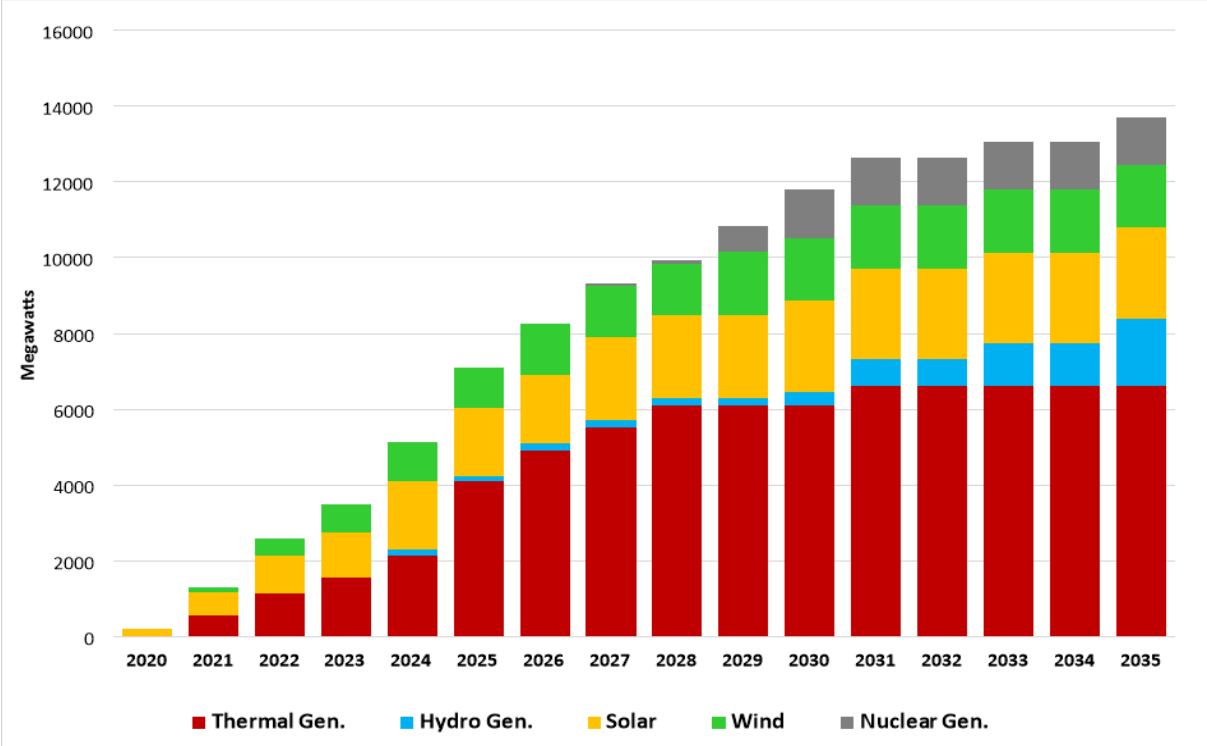

Figure 5: Annual Generation Capacity Additions (MW) during Period 2020-2035

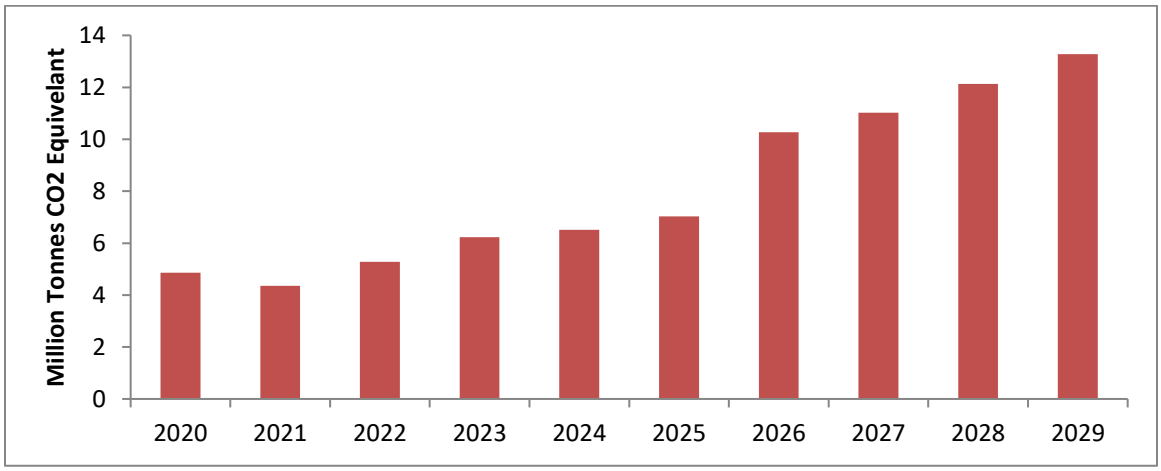

Figure 6: Electricity Generation Projected GHG emissions in the Baseline Scenario

5. Energy Sector mitigation projects

There were a number of successful Renewable Energy Technologies (RETs) projects implemented in different rural areas in Sudan funded by national, international NGOs and government such as:

- 5000 Fuel Efficient Stoves had been distributed in ten villages in North Darfur state started in year 2014 and this aimed at improving the environmental, economic status of women in the region and leads to a more sustainable use of natural resources.
- 5 MW solar power plant in Al-Fashir city had been constructed which equivalent to about half of the electricity needs of Al-Fashir city and also make saving for about 1.5 million dollars of fuel yearly. Another 5 MW solar power plant in Al-Diean city is currently under construction and also 1 MW of wind generation in Dongola city under construction.
- Introduction of PV lighting systems in schools improved the educational performance, in Khalwas provided the students with a much better quality of electric light instead of the traditionally light from wood fire, in health centers provided better and in time evening services, especially emergency cases, and encouraged some of the health workers stay in rural areas.
- Solar lighting for 1000 mosques in Blue Nile and Kassala states funded by Zakat chamber. Lighting in mosques changed the mosque into an educational and a social village center, Islamic reading, adult education classes and village meetings are common activities.
- The solar pumps for village water supply and small-scale irrigation had proved to be very economical, both as source of income generation to communities and small farmers as well as a reliable and as cheap water supply for the poor villagers.
- In El Ga`a, where women and children were the main labor force, the Introduction of solar evaporators freed them from the tedious work under harsh working conditions. This intervention reduced the school dropout rate and for the first time the village women had free time to attend adult educational classes and got involved in other income generating activities such as agriculture, poultry and handicrafts.
- FAO introduce biogas as well as WFP, gasification was used for electricity generation, UNHCR installed solar systems in the refugees' camps in East Sudan, White Nile and Darfur.

- Solar lighting for boarding villages between Sudan and Chad funded by Presidency of the republic.

Challenges:

- There is a lack of effective programs for Renewable Energy (RE) equipments dissemination as a clean source of energy for rural electrification and development.
- There is a need for laws and policies that encourage the private sectors to invest in Renewable Energy equipments such as; importation tax exception, profit tax reduction, facilitates the availability of hard currency for importation.
- There is no quality control and standards regulate the importation of solar energy equipments.
- Renewable Energy technologies projects in Sudan are often implemented by donation of development projects funded by UN or other international organization with the government, without the involvement of the private sector, if it is involved will grantee the sustainability of solar projects.
- The marketing of Renewable Energy technologies is very slow and till now very limited, although there is a big potential market in Sudan.

6. Mitigation opportunities in the energy sector

There are many potential Energy efficiencies and renewable energy sources that are considered as candidate projects (Wind, Solar (PV& CSP), geothermal, waste, small hydro plants and biogas). The potential from wind and solar will be expected to reach 4,050 MW by year 2035.

Table 2: Sudan's Intended Renewable Energy Mitigation Contributions

Program of Action	Target	Description	Cost (Million US $)
Renewable Energy	Transformation of electricity sector towards low carbon emissions power generation	Utility scale grid connected solar power plants (2400 MW) will be applicable in entire country on and off-grid will make saving of about 1,108,800 ton of fuel per year and saving of 3,467 Gg of CO_2e per year	6,418.4
		Utility scale grid connected wind power plants (1700 MW) will be applicable in strong wind regime areas (Dongola, Nyala, and Port Sudan) will make saving of about 1,232,500 ton of fuel per year and saving of 3,854 Gg of CO_2e per year	
		Roof top solar systems (250 MW) will be saving of 115,500 ton of fuel per year and saving of 361 Gg of CO_2e per year	
		Solar CSP (50 MW) will be saving of about 23,100 ton of fuel per year and saving of 72 Gg of CO_2e per year	
	Clean production for industrial sector (Solar for industry)	Replacement of diesel generators by (solar/wind) systems (Urban centers) (200 MW) will make saving of 118,700 ton of fuel per year and saving of 378 Gg of CO_2e per year	
		Solar systems for small and medium industries in remote areas (50 MW) will be saving of 74 Gg of CO_2e per year	

	Reliable power supply for Agriculture	Replacement for 54,000 diesel pumps with solar pumps (140 MW) will be saving of 64,680 ton of fuel per year and saving of 206 Gg of CO_2e per year	
	Energy alternatives for remote areas	Solar Home Systems (181 MW) will be saving of 83,622 ton of fuel per year and saving of 261 Gg of CO_2e per year	
		Hybrid systems (27 MW) will make saving of 12,747 ton of fuel per year and saving of 39 Gg of CO_2e per year	

Table 3: Sudan's Intended Energy Efficiency Mitigation Contributions

Program of Action	Target	Description	Accumulative saving at 2025	Accumulative saving up to 2035	Cost (Million US $)
Energy Efficiency	Reducing lighting consumption in the residential sector	Replacing one million three hundred thousand tungsten bulbs with LEDs	87.6GWh	1138GWh	3.3
	Reducing electricity consumption in government buildings	Reduction of 15% in daily consumption	193GWh	813GWh	1.3
	Improving power factor in all sectors	From 0.6-0.8 to 0.95	This procedure does not give direct energy savings, but rather provides capacity in the grids		0
	Reducing losses in Transmission networks	From 6.2% to 3% by the end of the 2035 plan	676GWh	3,738GWh	22
	Reducing losses in Distribution networks	From 18.0% to 11.0% by the end of the 2035 plan	534GWh	5,826GWh	186.3

	Rewinding the two generators units at Sinnar station	Rewinding the two generators units due to the damage that occurred as a result of aging after the end of their life time	0GWh	82.1GWh	3.5
	Raise the readiness of the Jebel Awlia Hydroelectric Power Station	Increasing generation of Jebel Awlia Hydroelectric Power Station to 42GWh annually	36,896GWh	79,062GWh	1.95

The challenges of strategy implementation:

There are a number of challenges that are expected to face the implementation of this plan, namely:

- Securing funds for the planned projects within the planned timelines.
- Difficulty in reaching settlements with landowners in Dams and Renewable energy projects
- Fulfil the commitment to pay for projects under implementation.
- Availability and supply of fuel required to operate thermal power plants.

6.1. Rural Electrification Plan during the Period of 2020-2035

Rural Electrification Plan aims to provide electrical supply to isolated areas (remote from the national grid), Besides offering temporary electrical supply to number of cities and villages in remote areas, until they are connected to the national grid in future plans, utilizing Solar Home System SHS, solar pumps, roof top solar PV systems and hybrid systems (Solar PV-Diesel Hybrid Systems). In order to execute rural electrification project, the following program has been planned:

6.1.1. SHS Solar Home Systems Program

The project targets 1.1 million solar home systems with a capacity of 50-100-200 watts. The period of the program is 2015-2035. A pilot project for 100 solar home systems was implemented in 4 states.

6.1.2. Solar Pumps

Studies revealed that the majority of islands located in the River Nile and many farms in remote areas have a prohibitive grid connection cost and it is unfeasible for their owners to deliver electricity from the national grid. Driven by this fact, work has been done to electrify such agricultural projects with the other energy alternatives. The Ministry has tended to use solar pumps to irrigate farms and agricultural projects all over the country, with total capacity of 400 MW by the end of the plan.

6.1.3. Generation from Roof Top Systems

The plan aims to promote installation of solar PV systems connected to the grid in buildings roof tops, in seek of morning peak reduction, this besides decreasing distribution losses as roof top systems produce energy in the place of consumption. The plan aims to install a total of 250 megawatts distributed in residential sector, government buildings and corporate buildings by the end of the 2035 plan.

6.1.4. Other Renewable Energy Technologies

The plan is targeting implementation of small hydropower plants with a capacity of 63 megawatts in total, most of which in irrigation canals. Moreover, the plan aims to generate electricity from biomass in a total capacity of 269.8 megawatts, 67 megawatts from waste-to-energy and about 26 MW from PV-Diesel Hybrid System.

7. Socio-Economic Benefits

The accomplishment of the mitigation contributions being proposed will undoubtedly bring important benefit for the wider communities and to the rural communities in particular, namely:

- Create employment opportunities in the area where the project is located during both its construction and operation phases.
- Enable the transfer of knowledge as turbine supplier will train site employees in the installation, operation and maintenance of the wind turbines.
- Contribute to local and state economy since most of the inputs are to be procured locally;
- Diversify the sources of electricity generation and support Sudan in meeting its growing energy demands.

- Assist Sudan in accelerating the commercialization of grid-connected renewable energy technologies and markets in the country.
- The eventual support provided by the international community to Sudan will strengthen the technical capacity of the country's human resources through assisted training and capacity building programs.

8. Gender Perspective

- As consumers, women may benefit from renewable energy in different ways, including reduced labor and time spent on activities such as wood fuel and water collection, as well as in food preparation and processing for which they are often responsible due to the gender division of labor.
- Connection to the energy grid can provide women and girls with more time to participate in educational activities or build social capital through greater interaction in the community and politics.
- Dependable light (including street lighting) and heat from grid-connected energy can also improve the safety, health, and well-being of women and their families (e.g., reducing gender-based violence through improved street lighting; cutting indoor and outdoor air pollution through reduced use of kerosene; improving Provision of clean water through boiling).
- Provide women, as well as men, with employment opportunities.
- Provide a broader set of livelihood options for women and men.

9. References

1. African Development Bank, National climate change: Sudan, 2017.
2. Modeling of Sudan's Energy Supply, Transformation, and Demand. Prof. Ali A. Rabah, Dr. Hassan B. Nimer, Dr. Quosay A. Ahmed and Dr.Kamal R. Doud. Energy Research Centre, Faculty of Engineering, University of Khartoum, Khartoum, Sudan.
3. IPCC, 2006. 2006 IPCC Guidelines for National Greenhouse Gas Inventories. The National Greenhouse Gas Inventories Programme, Eggleston H S, Buenida L, Miwa K, Ngara T, and Tanabe K, eds; Institute for Global Environmental Strategies (IGES). Hayama, Kanagawa, Japan.
4. Viewing Energy, Poverty and Sustainability in Development Countries Through a Gender Lens. Pius Fatona, Abiodun Abiodun, Adetayo Olumide, Adesanow Adeola and Oladunjoye Abiodun, 2013.
5. NAMA Framework Sudan, Higher Council for Environment & Natural Resources, 2015.